PERFORMANCE OIL TOOLS
Phone: 1-307-527-4500
Fax: 1-307-527-4501
3420 Big Horn Ave | Cody, WY 82414
performanceoiltools.com

PRODUCT CATALOG

Table of Contents

Hydraulic Bit Release Sub
Hydraulic Bit Release Sub with Profile
Hydraulic Bit Release Test Sleeve
Ported Bit Sub
Drill Pipe Float Valve
Hydraulic Bit Release Sub w/ Flow Back Check Valve
Hydraulic Bit Release Sub w/ Dual Flow Back Check Valve
Dual Back Pressure Valve
Retrievable Back Pressure Valve
Model 'BF' Profile Nipple
Model 'BR' Profile Nipple
Model 'OX' Profile Nipple
Model 'OXN' Profile Nipple
Model 'BL' Sliding Sleeve
Pressure Actuated Circulation Sleeve
Locator Seal Assembly
Model 'BFL' Seal Nipple
Hydraulic Dump Sub
Wireline Entry Guide
Wireline Entry Guide with Pump-Out Plug
Wireline Entry Guide with Pump-Out Ball Seat
Wash Nozzle Release Sub
Hydraulic Cement Sleeve
Pump Out Float Shoe
Tubing Shear-Out Safety Joint
Rod Shear-Out Safety Joint
High Pressure WRBP

* This is a sampling of Performance Oil Tools, Inc products. For custom design, contract manufacturing, or for information about additional products please contact Performance Oil Tools, Inc.

Company Summary

Performance Oil Tools, Inc began doing business in 2002 by designing, producing and distributing quality downhole oil and gas equipment to completion and service tool companies.

Performance Oil Tools, Inc continues to supply new and modified designs to the oil and gas industry, as well as expanding our custom design and contract manufacturing capabilities. Performance Oil Tools, Inc produces quality products and responds quickly to market demands of the oil and gas industry.

Performance Oil Tools, Inc is committed to providing products and services that consistently meet or exceed the customer's requirements through engineering, design, marketing and technical support.

- Custom Design
- Contract Manufacturing
- Quality Equipment
- Technical Support
- Market Responsive

Model 'BL' Sliding Sleeve

The Performance Oil Tools, Inc 'BL" Sliding Sleeve is a tubing mounted flow control device that controls the flow between the tubing and annulus.

FEATURES

- Advanced seal system
- Simple operation
- Multiple sleeves run in tandom
- Standard locking profile
- Sleeve recessed in protected position
- Field redressable

Model 'BL' Sliding Sleeve Specification Guide

Tubing OD	Seal Bore	Size	OD
2-3/8	1.781	1.78	2.910
	1.812	1.81	
	1.875	1.87	
2-7/8	2.250	2.25	3.410
	2.312	2.31	
3-1/2	2.750	2.75	4.500
	2.812	2.81	

Drill Pipe Float Valve

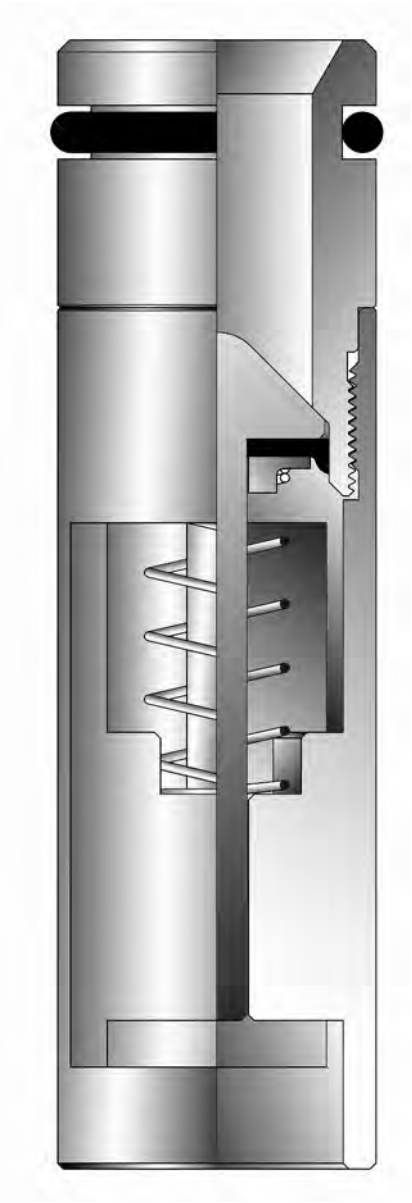

The Performance Oil Tools, Inc Drill Pipe Float Valve is a positive shut-off valve that eliminates flow from the annulus into the tubing.

FEATURES

- Prevents flow back
- Fast acting plunger valve
- Low pressure rubber seal
- High pressure metal to metal seal
- Low carbon steel construction

Drill Pipe Float Valve Specification Guide	
Valve Size	**Tool Joint Type**
23FV	2-3/8 API REG.
27FV	2-7/8” API REG.
35FV	3-1/2” API REG.

Hydraulic Bit Release Sub

The Performance Oil Tools, Inc Hydraulic Bit Release Sub is a disconnect device used to remove the drill bit or mill after drilling operations are completed.

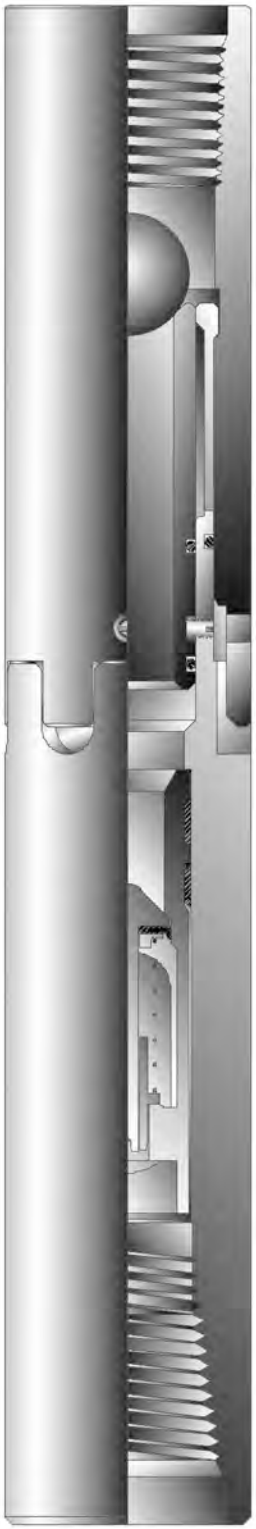

FEATURES

- Eliminate tubing trip after drill out
- High strength
- High torque
- Hydraulic release
- Full open after release
- Standard EU Coupling OD above API connection
- Field adjustable shear pressure
- Compatible with industry standard Float Valves
- Wireline reentry guide after release
- Notched collar after release
- All parts contained in bottom sub after shear-out

OPERATION

Determine the desired release pressure and install the appropriate number of shear screws prior to run-in. After drill out is completed, circulate ball down to seat and increase pressure to predetermined release pressure. Sub will separate, dropping the bit to the bottom of the well.

Hydraulic Bit Release Sub Specification Guide

Size	Threads	Max OD
2-3/8	2-3/8 EU x 2-3/8 API REG.	3-1/4”
2-3/8 x 2-7/8	2-3/8 EU x 2-7/8 API REG.	3-3/4”
2-7/8	2-7/8 EU x 2-7/8 API REG.	3-3/4”
3-1/2	3-1/2 EU x 3-1/2 API REG.	4-1/4”

Tubing Shear-Out Safety Joint

The Performance Oil Tools, Inc Tubing Shear-Out Safety Joint is used as an emergency release to get tubing out of well when the tubing or pump are stuck in the well.

FEATURES

- Rotationally locked
- Straight pull release
- Field adjustable shear force
- Large ID
- Redressable
- Available in stainless or alloy steel

Tubing Shear-Out Safety Joint Specification Guide				
Size	**Threads**	**MAX OD**	**ID**	**Fishing OD**
1-1/4	1-1/4 NPT Pin x Pin	2.062	1.000	1.800
2-3/8	2-3/8 EU Box x Pin	3.062	1.950	2.880
2-7/8	2-7/8 EU Box x Pin	3.812	2.441	3.420

Rod Shear-Out Safety Joint

The Performance Oil Tools, Inc Rod Shear-Out Safety Joint is primarily used as an emergency release for removing the rods from wells when progressive cavity pumps are stuck due to scale or fill.

FEATURES

- Rotationally locked
- Straight pull release
- Field adjustable shear force
- Available in stainless or alloy steel
- Redressable

Rod Shear-Out Safety Joint Specification Guide

Size	Threads	Max OD
3/4”	3/4” Sucker Rod Box x Pin	1.500
7/8”	7/8” Sucker Rod Box x Pin	1.625
1”	1” Sucker Rod Box x Pin	2.000
1-1/8”	1-1/8” Sucker Rod Box x Pin	2.250

Ported Bit Sub

The Performance Oil Tools, Inc Ported Bit Sub is used in under balance drilling operation where releasing the bit is undesirable.

FEATURES

- High strength
- Hydraulic open
- Compatible with standard float valves
- Field adjustable opening pressure
- High flow area

Ported Bit Sub Specification Guide		
Size	**Threads**	**Max OD**
2-3/8	2-3/8 EU x 2-3/8 API REG.	3-1/4”
2-3/8 x 2-7/8	2-3/8 EU x 2-7/8 API REG.	3-3/4”
2-7/8	2-7/8 EU x 2-7/8 API REG.	3-3/4”
3-1/2	3-1/2 EU x 3-1/2 API REG.	4-1/4”

Pump-Out Float Shoe

The Performance Oil Tools, Inc Pump-out Float Shoe is used to float casing strings into well bore.

FEATURES

- Pump-out or drill-out
- Beveled to guide casing
- Standard float valve technology
- Verifies Hydraulic Cement Sleeve is fully locked
- Runs in conjunction with Performance Oil Tools, Inc Hydraulic Cement Sleeve
- Full casing drift after pump-out

Pump-Out Float Shoe Specification Guide		
Size	**Connections**	**OD**
4-1/2”	4-1/2” LTC Box	5”
5-1/2”	5-1/2” LTC Box	6-1/16”
7”	7” LTC Box	7-21/32”

Hydraulic Bit Release Sub with Profile

The Performance Oil Tools, Inc. Hydraulic Bit Release Sub with Profile is a disconnect device used to remove the drill bit or mill after drilling operations are completed.

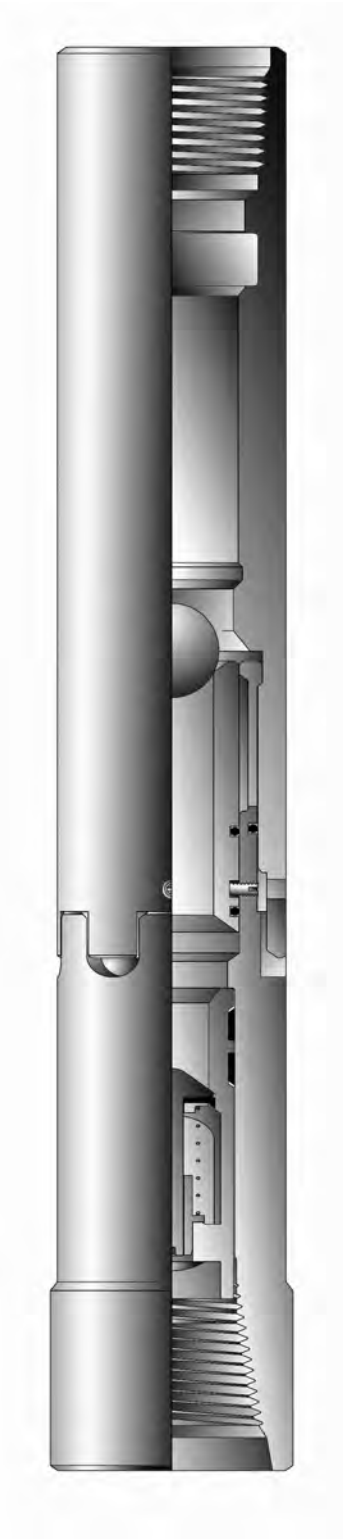

FEATURES

- Eliminate tubing trip after drill out
- Integrate Profile and Seal Bore in Top Sub
- High strength
- High torque
- Hydraulic release
- Full open after release
- Standard EU Coupling OD above API connection
- Field adjustable shear pressure
- Compatible with industry standard Float Valves
- Wireline reentry guide after release
- Notched collar after release
- All parts contained in bottom sub after shear-out

OPERATION

Determine the desired release pressure and install the appropriate number of shear screws prior to run-in. After drill out is completed, circulate ball down to seat and increase pressure to predetermined release pressure. Sub will separate, dropping the bit to the bottom of the well, leaving an industry standard Profile Nipple with notched collar.

Hydraulic Bit Release Sub Specification Guide

Size	Threads	Max OD
2-3/8	2-3/8 EU x 2-3/8 API Reg.	3-1/8”
2-3/8 x 2-7/8	2-3/8 EU x 2-7/8 API Reg.	3-3/4”
2-7/8	2-7/8 EU x 2-7/8 API Reg.	3-3/4”
3-1/2	3-1/2 EU x 3-1/2 API Reg.	4-1/4”

Bit Release Test Sleeve

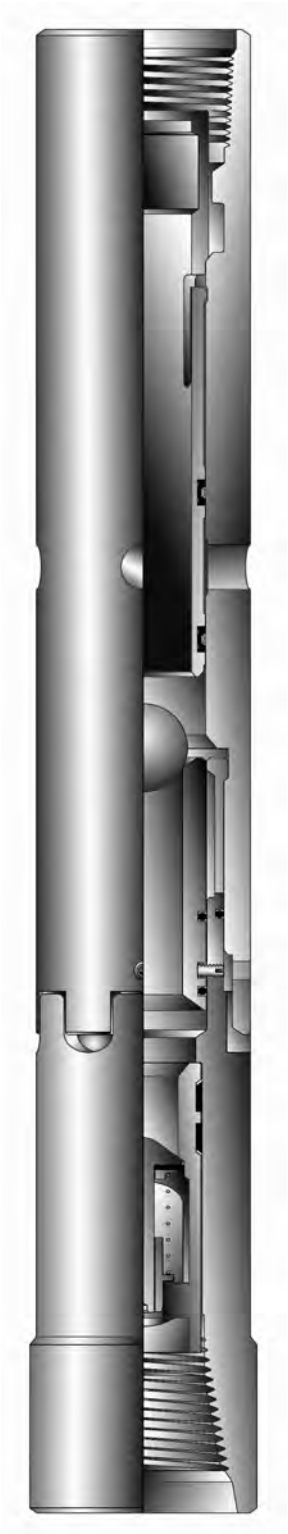

The Performance Oil Tools, Bit Release Test Sleeve is a combination Test Sleeve and Bit Release Sub.

FEATURES

- Test zones without tubing trip
- Continue drilling after zone test
- Isolation sleeve uses standard wireline pulling tool
- Large flow area during testing
- Standard lock profile in top sub
- Eliminate tubing trip after drill out
- Standard EU coupling OD above API Connection
- High strength
- High torque
- Hydraulic release
- Full open after release
- Field adjustable shear pressure
- Compatible with industry standard Float Valves
- Wireline re-entry guide after release
- Notched collar after release
- Parts contained in bottom sub after release

OPERATION

Determine the desired release pressure and install the appropriate number of shear screws prior to run-in. Retrieve Isolation Sleeve after each plug is drilled out for testing. Run Isolation Sleeve after test and continue drilling. After all testing and drilling is completed, circulate ball down to seat and increase pressure to predetermined release pressure. Sub will separate, dropping the bit to the bottom of the well.

Bit Release Test Sleeve Specification Guide

Size	Connections	OD
2-3/8	2-3/8 EU x 2-3/8 API Reg.	3-1/8”
2-3/8 x 2-7/8	2-3/8 EU x 2-7/8 API Reg.	3-3/4”
2-7/8	2-7/8 EU x 2-7/8 API Reg.	3-3/4”
3-1/2	3-1/2 EU x 3-1/2 API Reg.	4-1/4”

Model 'BF' Profile Nipple

The Performance Oil Tools, Inc Model 'BF' Profile Nipple is a Top NoGo or Selective Profile Nipple that allows installation of various wireline flow control devices in the production string.

The location and number of Model 'BF' Profile Nipples should be carefully considered in the completion planning stages to allow maximum versatility in the positioning of various flow control accessories.

FEATURES/BENEFITS

- Internal sealing bore
- Accepts Selective of Top NoGo Locks
- Multiple Model 'BF' Nipples with the same seal bore can be run in the tubing when Selective Locks are required
- Available in Alloy and Stainless Steel material

APPLICATONS

Model 'BF' Profile Nipples may be used for the following operations:

- Land blanking pugs to shut in well or to test the production tubing.
- Land Velocity type Safety Valves
- Land equalizing check valves
- Land circulating blanking plugs
- Land chokes to reduce surface flowing pressures or to have pressure drops downhole to prevent surface freezing in gas production
- Land instrument hangers with geophysical devices such as pressure and temperature recorders

Model 'BF' Profile Nipple Specification Guide

Tubing OD	Nipple		
	Seal Bore	Size*	Min. OD
1.660	1.187	1.18	1.875
	1.250	1.25	
1.900	1.437	1.43	2.109
	1.500	1.50	
2-1/16	1.562	1.56	2.250
	1.625	1.62	
2-3/8	1.781	1.78	2.560
	1.812	1.81	
	1.875	1.87	
2-7/8	2.062	2.06	3.109
	2.250	2.25	
	2.312	2.31	
3-1/2	2.562	2.56	3.687
	2.750	2.75	
	2.812	2.81	

* Other sizes for heavy weight tubing are available on request.

Model 'BR' Profile Nipple

The Performance Oil Tools, Inc Model 'BR' Profile Nipple is a Bottom NoGo Profile Nipple that allows installation of various wireline flow control devices in the production string.

The location and number of Model 'BR' Profile Nipples should be carefully considered in the completion planning stages to allow maximum versatility in the positioning of various flow control accessories.

FEATURES/BENEFITS

- Internal sealing bores for maximum sealing performance
- Available in Alloy or Stainless material

APPLICATIONS

Model 'BR' Profile Nipples may be used for the following operations.

- Land blanking plugs to shut in the well or to test the production tubing.
- Land Velocity Type Safety Valves
- Land equalizing check valves
- Land circulating blanking plugs
- Prevent loss of wireline work string in some cases
- Land chokes to reduce surface flowing pressures or to have pressure drops downhole to prevent surface freezing in gas production
- Land instrument hangers with geophysical devices such as pressure and temperature recorders

Model 'BR' Profile Nipple Specification Guide

Tubing OD	Nipple			
	Seal Bore	Size*	NoGo ID	Min. OD
1.660	1.187	1.18	1.135	1.875
1.900	1.437	1.43	1.385	2.109
	1.500	1.50	1.447	
2-1/16	1.562	1.56	1.510	2.250
2-3/8	1.781	1.78	1.728	2.560
	1.812	1.81	1.760	
	1.875	1.87	1.822	
2-7/8	2.062	2.06	1.978	3.109
	2.250	2.25	2.197	
3-1/2	2.562	2.56	2.442	3.687
	2.750	2.75	2.697	

* Other sizes for heavy weight tubing are available on request.

Model 'OX' Profile Nipple

The Performance Oil Tools, Inc 'OX' Profile Nipples are designed to provide downhole selectivity. Operators can place as many selective nipples, as desired in the tubing string to provide an unlimited number of positions for setting and locking subsurface flow controls. Individual nipples can be selected for the flow control devices, if this location is unsatisfactory, or well conditions change, the flow control device may be moved up or down the tubing string wherever another nipple is located, all by wireline, under pressure, without killing the well.

FEATURES

- Internal Seal Bore
- Large bore to permit maximum flow capacity
- Nipple bores compatible with tubing size and weight
- Selectivity when running, setting or retrieving subsurface flow controls
- Universal nipples with one internal profile
- Available in Alloy or Stainless material
- Available in Pin x Pin or Box x Pin

Model 'OX' Profile Nipple Specification Guide

Tubing OD	Seal Bore
1.900	1.500
2-1/16	1.625
2-3/8	1.875
2-7/8	2.313
3-1/2	2.813 2.750
4	3.313
4-1/2	3.813

Model 'OXN' Profile Nipple

Performance Oil Tools, Inc 'OXN' NoGo Profile Nipples are designed for use in single nipple instalations or as the bottom nipple in conjunction with a series of 'OX' Profile Nipples. The profile nipples have the same packing bore I.D. for a particular tubing size and weight. 'OX' and 'OXN' Profile Nipples are designed for use with standard weight tubing. The 'N' designation is for nogo nipples.

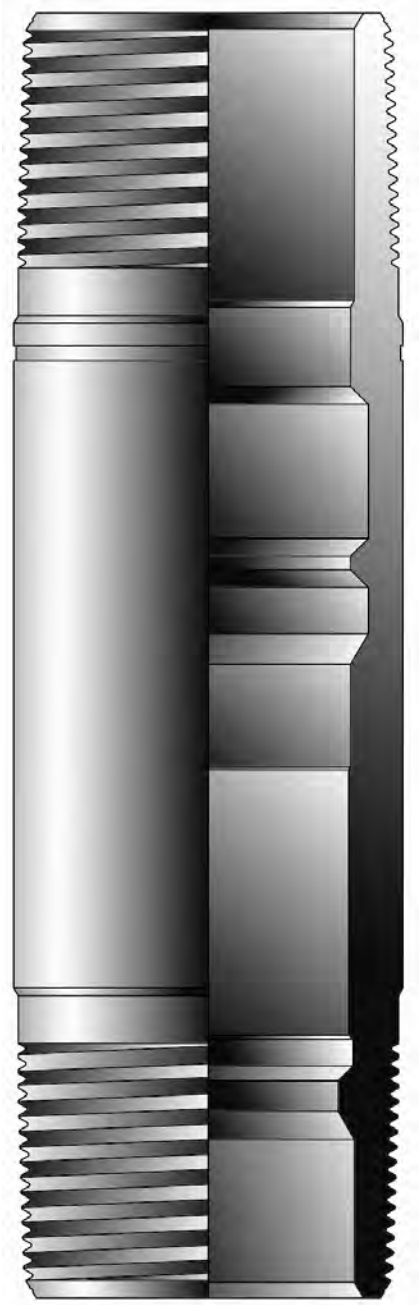

FEATURES/BENEFITS

- Internal Seal Bore
- Full-opening packing bore with locking recess at top of nipple and a slightly restricted nogo profile at the bottom designed to keep subsurface slow controls from being run below the tubing intake
- Available in Alloy or Stainless material
- Available in Pin x Pin or Box x Pin

Model 'OXN' Profile Nipple Specification Guide

Tubing OD	Seal Bore	NoGo ID
1.900	1.500	1.448
2-1/16	1.625	1.536
2-3/8	1.875	1.791
2-7/8	2.313	2.205
3-1/2	2.813 2.750	2.875 2.875 2.875
4	3.313	3.135
4-1/2	3.813	3.725

Pressure Actuated Circulation Sleeve 10K

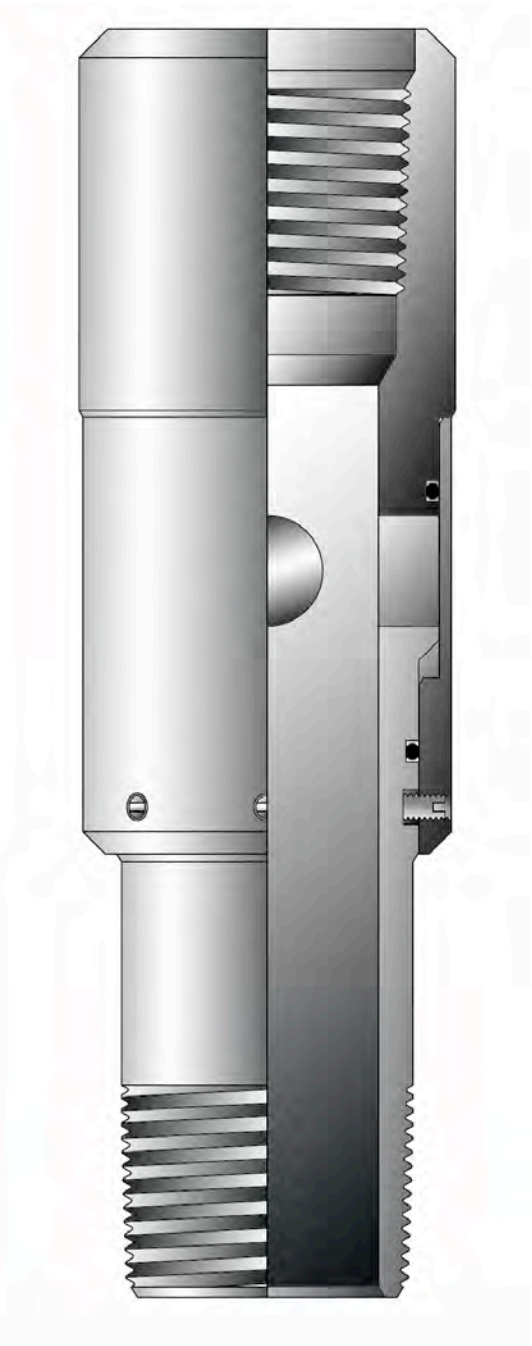

The Performance Oil Tools, Inc Pressure Actuated Circulation Sleeve is used to permit communication between the tubing and annulus, without use of wireline equipment.

FEATURES

- Pressure Actuated
- High Flow Area (3.14 in^2)
- Field Adjustable Opening Pressure 615 PSI per screw (8)
- Full Tubing I.D.
- Redressable

OPERATION

Determine the desired opening pressure and install the appropriate number of shear screws. Install the Pressure Activated Circulation Sleeve in the tubing string where desired. Opening the Pressure Activated Circulation Sleeve is accomplished by applying internal pressure to the tubing.

Pressure Actuated Circulation Sleeve Specification Guide

Size	Threads	ID	OD
2-3/8	2-3/8 EU Box x Pin	2.00	3.57

Locator Seal Assembly

The Performance Oil Tools, Inc Locator Seal Assembly is a continuous seal assembly, which utilizes an advanced seal system crimped to the O.D.

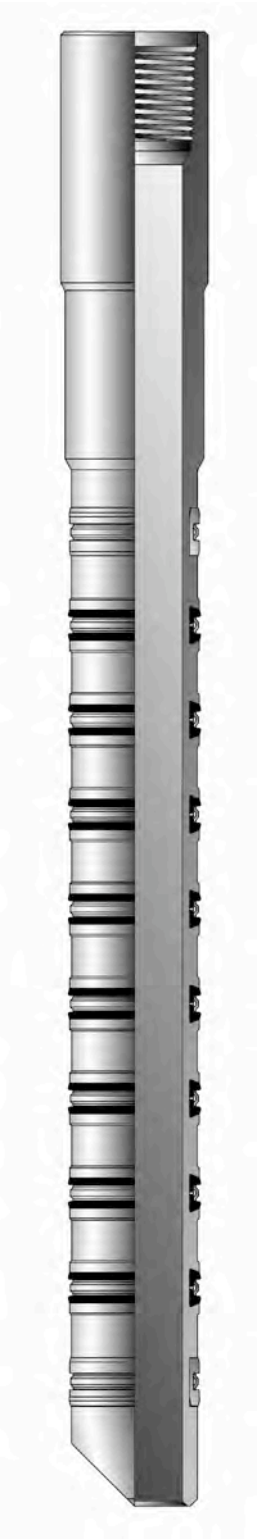

FEATURES

- Advanced Seal System
- Increased pressure rating
- Increased strength
- Redressable
- 90 Duro Nitrile Standard
- Viton, Aflas, etc. available
- Compatible with all Seal Bore Packers
- Teflon guides reduce seal drag
- Compatible with all standard accessories
- Manufactured using standard alloy or premium material

OPERATION

Operation of the Performance Oil Tools, Inc. Locator Seal Assembly is consistent with other manufacturers seal assemblies. Make up on tubing, run-in to desired depth, space out properly and verify seals are placed in the desired seal bore.

Locator Seal Assembly Specification Guide
*** The Performance Oil Tools Locator Seal Assemblies can be manufactured to fit all standard seal bores.**

Model 'BFL' Seal Nipple

The Performance Oil Tools, Inc 'FL' Seal Nipple is a tubing disconnect device.

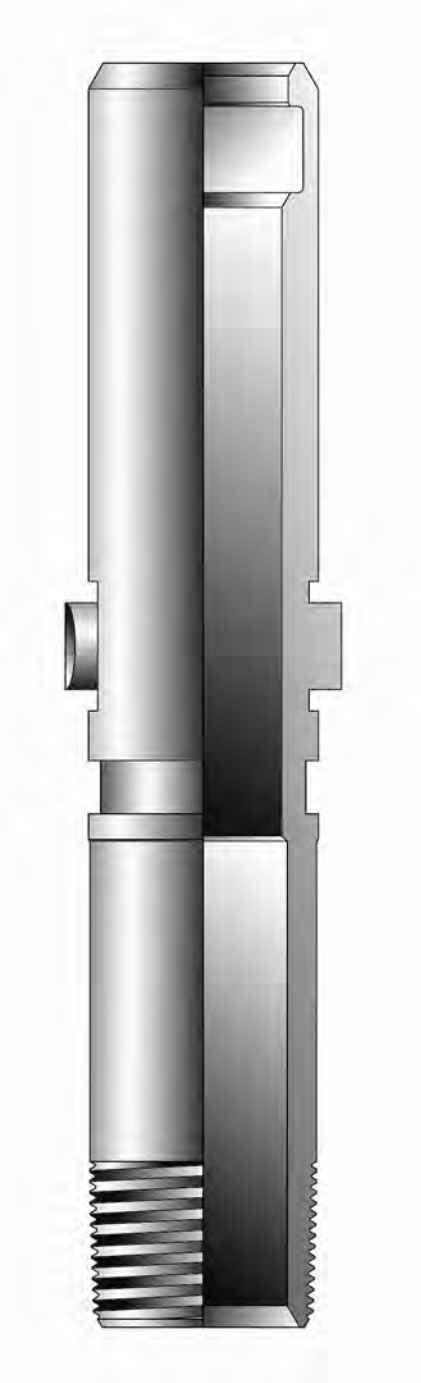

FEATURES

- Interchangeable with other manufactures
- Polished seal surface
- Baker and Otis profiles available
- L-80 compatible
- Premium materials available

Model 'FL' Seal Nipple Specification Guide	
Tubing Size	**Seal Bore**
2-3/8" EU Pin	1.781 (Baker) 1.812 (Baker) 1.875 (Baker) 1.875 (Otis)
2-7/8" EU Pin	2.062 (Baker) 2.250 (Baker) 2.312 (Baker) 2.313 (Otis)

Hydraulic Dump Sub

The Performance Oil Tools, Inc Hydraulic Dump Sub is used to drain the fluid from the tubing string above an ECP, PCP or Rod Pump.

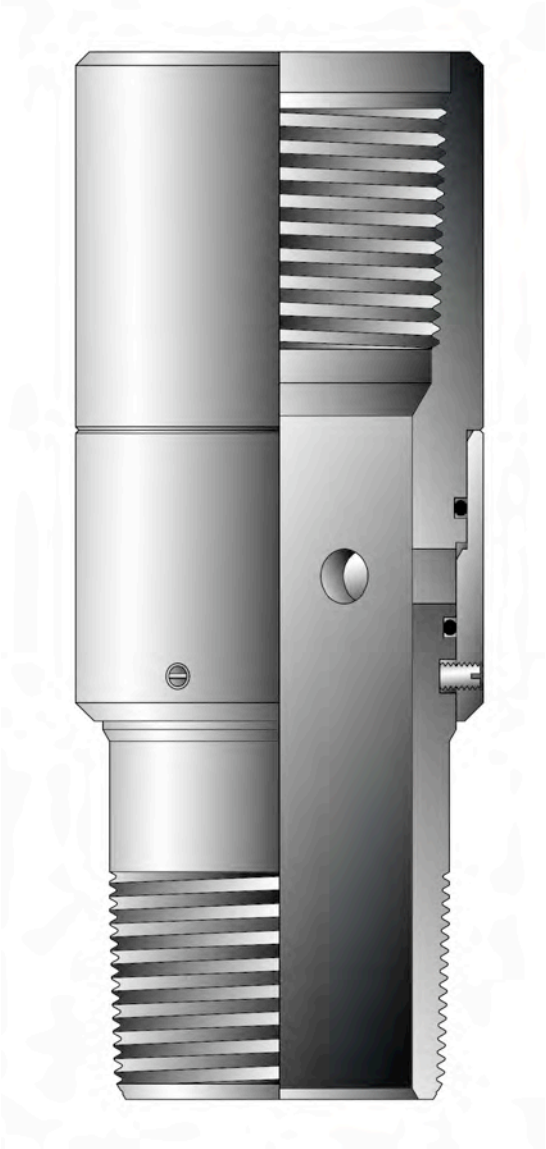

FEATURES

- Pressure Actuated
- High Flow Area
- Field Adjustable Opening Pressure
- Full Tubing I.D.
- Coupling O.D.

OPERATION

Determine the required number of shear screws prior to installation. Place the Hydraulic Dump Sub in the tubing string above the pump assembly. Apply pressure to the tubing string to open the Hydraulic Dump Sub when necessary.

Hydraulic Dump Sub Specification Guide

Size	Threads	ID	OD
2-3/8	2-3/8 EU Box x Pin	1.995	3.750

Wireline Entry Guide

Performance Oil Tools, Inc Wireline Entry Guide is an open-ended sub located at the end of the tubing string to provide assurance that wireline tools that have passed out the bottom of the tubing string may re-enter without hanging up.

Wireline Entry Guide Specification Guide		
Thread	**Guide ID**	**Guide OD**
2-3/8 EU Box	2.000”	3.063”
2-7/8 EU Box	2.441”	3.687”
3-1/2 EU Box	3.000”	4.500”

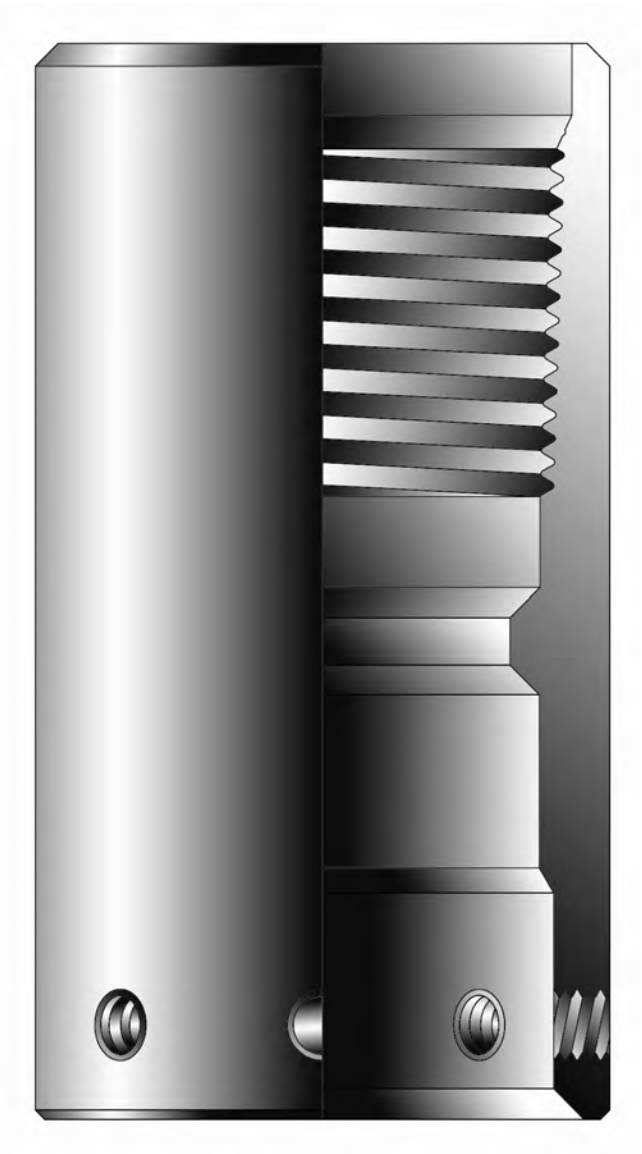

Hydraulic Cement Sleeve

Performance Oil Tools, Inc hydraulic Cement Sleeve is used to control the flow of cement during single or multi-stage cement operations.

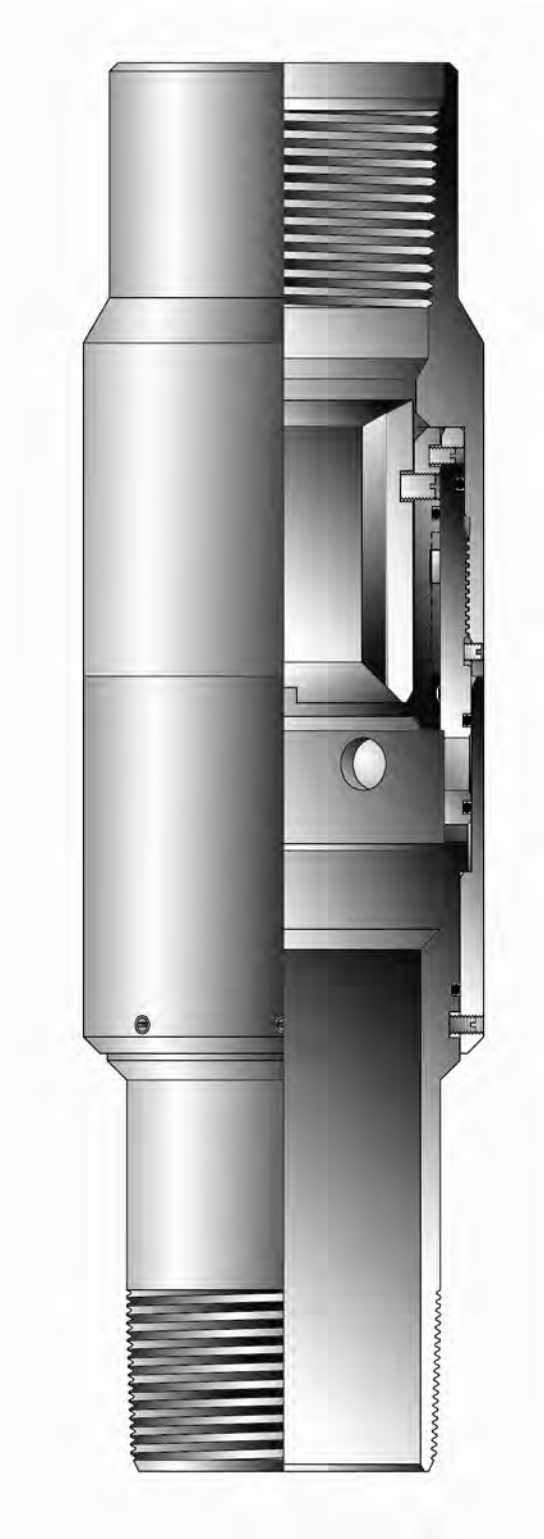

FEATURES

- Hydraulic open
- Adjustable opening pressure
- High flow area
- Reduced turbulence during pumping
- Mechanically closed with wiper plug
- Locks in closed position
- Internal parts can be pumped-out
- Full open ID after pump-out or drill-out
- Compatible with inflatable and mechanical packers

OPERATION

Determine desired opening pressure and install the proper number of shear screws prior to run-in. Install Hydraulic Cement Sleeve in casing string at desired depth. After setting casing packer or completing first cement stage, increase pressure to open Hydraulic Cement Sleeve and pump cement through sleeve. Hydraulic Cement Sleeve closes when top wiper plug is landed in Hydraulic Cement Sleeve. Internal parts can be pumped out of the casing string at this time if run in conjunction with a pump-out float shoe.

Hydraulic Cement Sleeve Specification Guide

Size	Connections	OD
4-1/2”	4-1/2” LTC Box x 4-1/2” STC Pin	5-3/4”
5-1/2”	5-1/2” LTC Box x 5-1/2” STC Pin	7”
7”	7” LTC Box x 7” STC Pin	8-1/4”

Wash Nozzle Release Sub

The Performance Oil Tools, Inc Wash Nozzle Release Sub is a wash down device with an internal check valve used in under-balanced clean out operations.

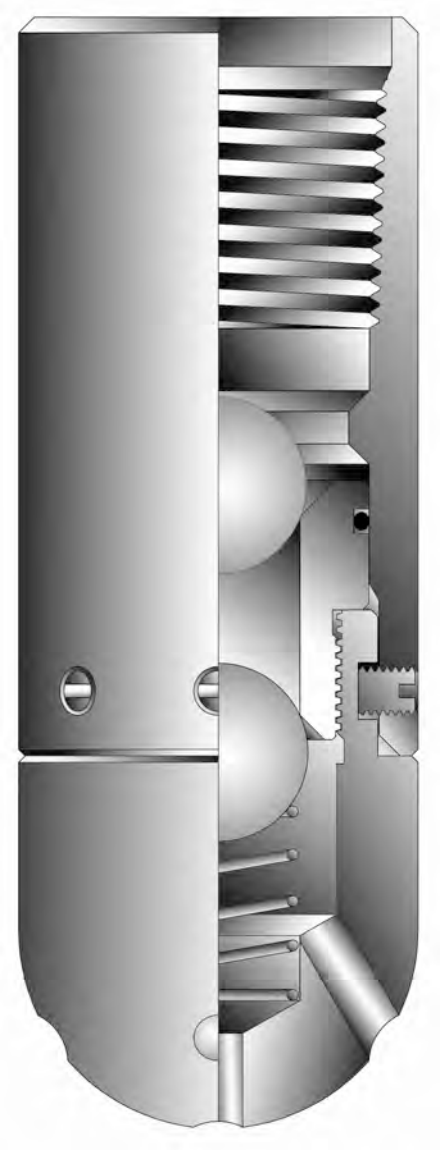

FEATURES

- Eliminate tubing trip after wash down
- Integral ball type check valve
- Hydraulic release
- Angled ports for improved wash down
- Full opening after pump out
- Wireline re-entry guide after pump out

OPERATION

Determine the desired pump out pressure and install the appropriate number of shear screws prior to run-in. After wash down is completed, circulate release ball down to seat and increase pressure to predetermined pump out pressure. Ball check sub assembly will be released and fall to the bottom of the well.

Wash Nozzle Release Sub Specification Guide

Size	Threads	OD	ID*
2-3/8	2-3/8 EU Box	1.3.063	2.000”
2-7/8	2-7/8 EU Box	2.3.687	2.441”
3-1/2	3-1/2 EU Box	2.4.500	3.000”

*ID After Pump-out

Wireline Entry Guide with Pump-Out Plug

The Performance Oil Tools, Inc Wireline Entry Guide with Pump-Out Plug provides a means of temporarily plugging the bottom of a tubing string to avoid fluid flow up the tubing while tripping in the hole. The Pump-Out Plug is removed by filling the tubing with fluid and applying a pressure above the plug sufficiently greater than the normal well pressure at the tool to shear the retaining shear screws and pump the plug out of the Wireline Entry Guide. The plug will then fall to the bottom of the well.

Wireline Entry Guide with Pump-Out Plug Specification Guide		
Thread	**Guide ID***	**Guide OD**
2-3/8 EU Box	2.000”	3.063”
2-7/8 EU Box	2.441”	3.687”
3-1/2 EU Box	3.000”	4.500”

***ID after pump-out**

Wireline Entry Guide with Pump-Out Ball Seat

The Performance Oil Tools, Inc Wireline Entry Guide with Pump-Out Ball Seat is intended for use as a temporary bridging and pressure retaining device used to set hydraulic packers and test tubing strings. The Ball Seat has a hole through its center that will allow the tubing to fill while running and provide for passage of fluids to be displaced into the tubing or spotted in the well bore. A ball is then dropped from the surface and seats against the tapered ball seat. Pressure can then be applied to set the packer or test the tubing. Increase pressure to shear the Ball Seat. The Ball and Seat will then fall to the bottom of the well leaving the tubing with a full opening Wireline Re-entry Guide.

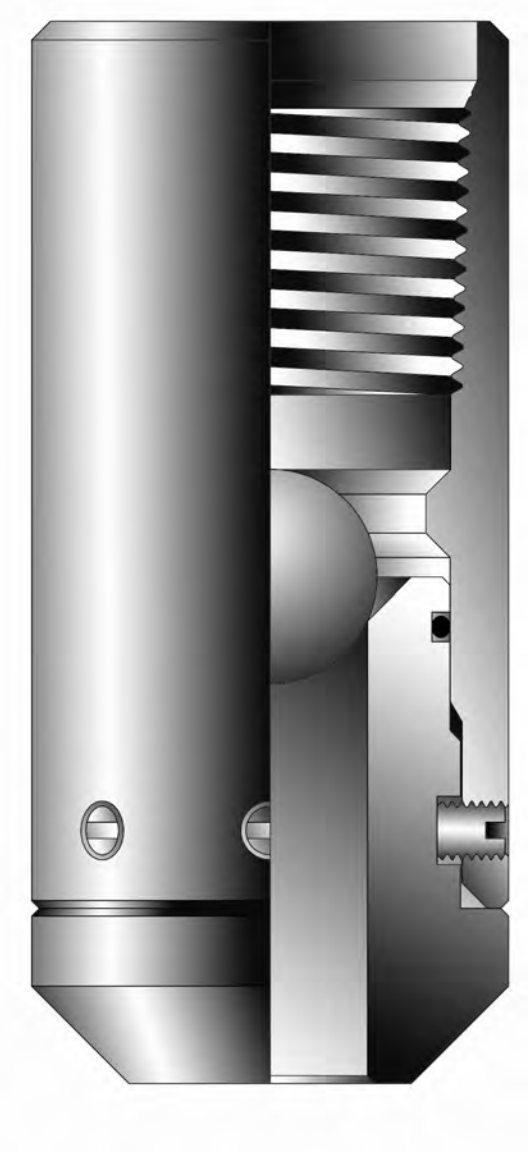

Wireline Entry Guide with Pump-Out Ball Seat Specification Guide				
Thread	**Guide ID**	**Seat ID**	**Ball Size**	**Guide OD**
2-3/8 EU Box	2.000”	1.250”	1.375”	3.063”
2-7/8 EU Box	2.441”	1.438”	1.750”	3.687”
3-1/2 EU Box	3.000”	1.625”	2.000”	4.500”

HIGH PRESSURE WRBP

The Performance Oil Tools, Inc High Pressure WRBP is a modification of the standard WRBP designed to withstand higher pressures related to current completion practices.

FEATURES / BENEFITS

Wireline, hydraulic or coiled tubing set
Bi-directional slips
Balanced equalizing system
Equalizing valve opens before plug is released
Straight pull release mechanism
Rotational safety release mechanism
Optional coiled tubing retrieve

APPLICATIONS

Temporary bridge plug for acidizing, fracturing, cementing, casing pressure tests, well head replacement and zone isolation.

MECHANICAL REDESIGN

The 5-1/2" WRBP has been redesigned to increase pressure ratings to 12,500 psi without damage to the mechanical parts.

**Element system limited by temperature and pressure.*

HYDRAULIC BIT RELEASE SUB W/ FLOW BACK CHECK VALVE

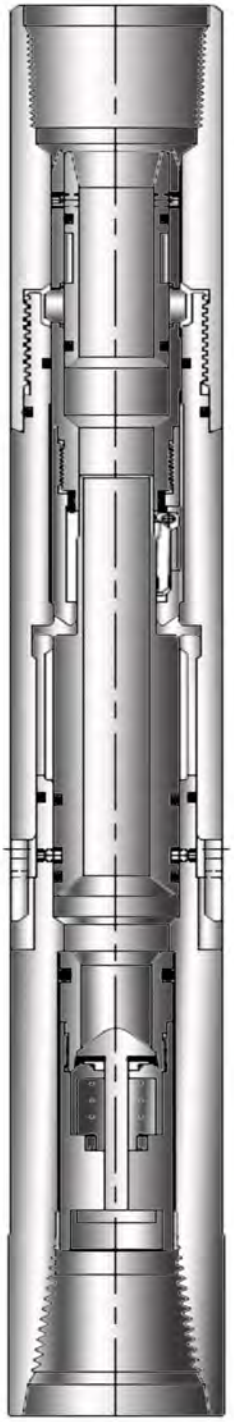

The Performance Oil Tools Hydraulic Bit Release Sub w/ Flow Back Check Valve Is a disconnect device used to remove the Drill Bit or Mill after horizontal drilling operations.

FEATURES:

- Eliminates tubing trip after drill out
- High Strength
- High Torque
- Hydraulic release
- Flow Back check Valve allows tubing to be ran to a vertical position while maintaining well control.
- Flow Back Check Valve hydraulically released.
- Full open after Flow Back Valve is removed.
- Field adjustable shear pressure
- Wireline Entry Guide after release
- Uses Standard float valves

Hydraulic Bit Release Sub w/ Flow Back Check Valve

Size	Threads	Max OD
2-3/8	2-3/8 EU x 2-3/8 API Reg.	3-1/8
2-3/8 2-7/8	2-3/8 EU x 2-7/8 API Reg.	3-3/4
2-7/8	2-7/8 EU x 2-7/8 API Reg.	4-1/4

HYDRAULIC BIT RELEASE SUB W/ DUAL FLOW BACK CHECK VALVE

The Performance Oil Tools Hydraulic Bit Release Sub w/ Dual Flow Back Check Valve is a disconnect device used to remove the Drill Bit or Mill after drilling operations.
The Performance Oil Tools Hydraulic Bit Release Sub w/ Dual Flow Back Check Valve maintains well bore control while moving tubing to a landing position.

FEATURES

- Dual Flow Back Check Valve allows tubing to be moved to a landing position while maintaining well control.
- Dual Flow Back Check Valve is hydraulically released.
- Full open after Dual Flow Back Valve is removed
- Hydraulic disconnect of Drill Bit
- Eliminates tubing trip after drill out
- Field adjustable shear pressure for disconnect of Drill Bit
- Wireline Entry Guide after release
- High Strength
- High Torque
- Uses Standard float valves

Hydraulic Bit Release Sub w/ Dual Flow Back Check Valve

Size	Threads	Max OD
2-3/8	2-3/8 EU x 2-3/8 API Reg.	3-1/8
2-3/8 2-7/8	2-3/8 EU x 2-7/8 API Reg.	3-3/4
2-7/8	2-7/8 EU x 2-7/8 API Reg.	4-1/4

RETRIEVABLE BACK PRESSURE VALVE

The Performance Oil Tools Retrievable Back Pressure Valve is used to control well pressure while moving tubing to the landing position.

FEATURES

- Retrievable Back Pressure Valve maintains pressure control of tubing.
- Retrievable Back Pressure Valve is mechanically released and retrieved using a GS pulling tool.
- Full opening after removal of valve.
- Eliminates tubing trip after drill out
- High Strength
- High Torque

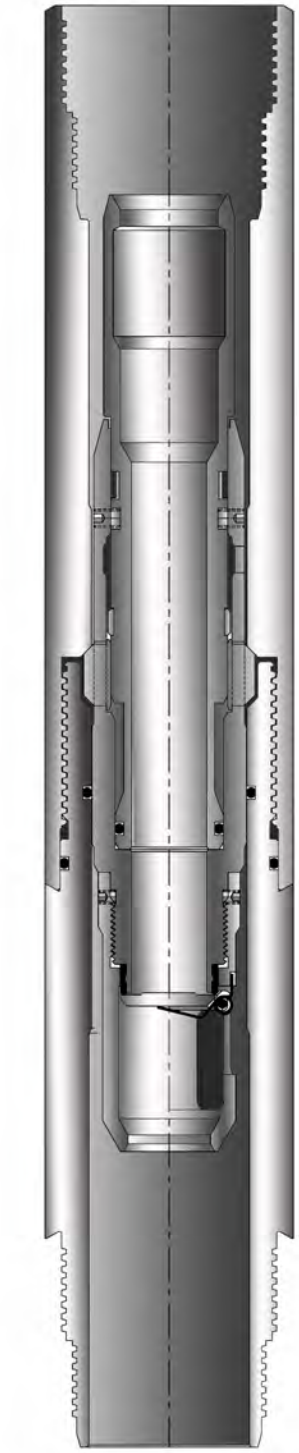

Retrievable Back Pressure Valve		
Size	**Threads**	**Max OD**
2-3/8	2-3/8 EU x 2-3/8 EU	3-1/8
2-7/8	2-7/8 EU x 2-7/8 API Reg.	3-3/4

DUAL BACK PRESSURE VALVE

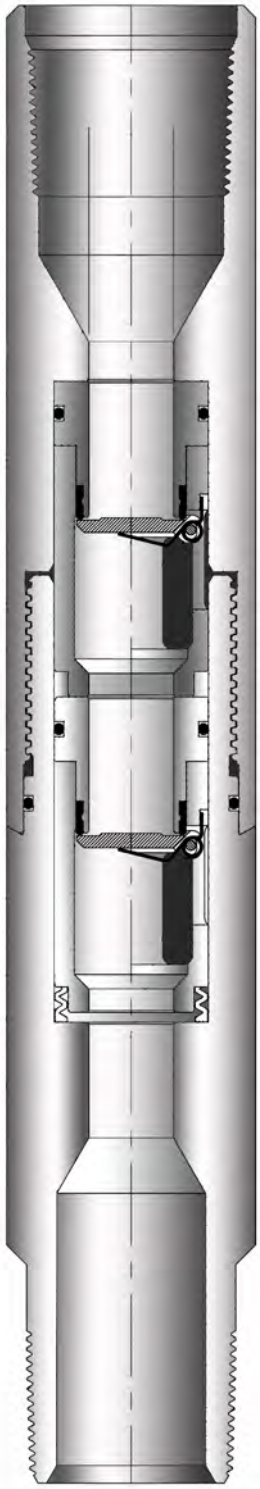

The Performance Oil Tools Dual Back Pressure Valve maintains well bore control while moving tubing to a landing position.

FEATURES

- Dual Back Pressure Valve allows tubing to be moved to a landing position while maintaining well control.
- Dual Back Pressure Valve is hydraulically released.
- Full open after Dual Back Pressure Valve is removed
- Eliminates tubing trip after drill out
- Field adjustable shear pressure for disconnect of Drill Bit
- High Strength
- High Torque

Dual Back Pressure Valve

Size	Threads	Max OD
2-3/8	2-3/8 EU x 2-3/8 EU	3-1/8
2-7/8	2-7/8 EU x 2-7/8 API Reg.	3-3/4